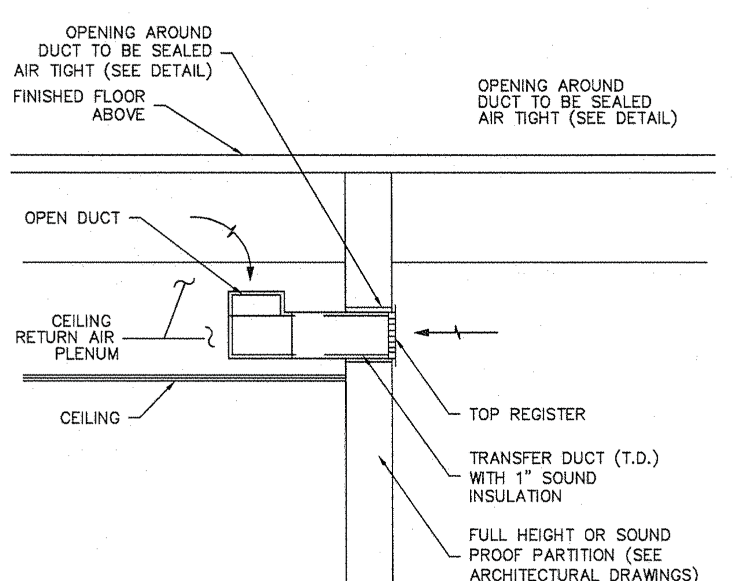

NOTE:
FOR DIMENSION OF DUCT AND GRILLES SEE HVAC PLANS

CEILING GRILLE & TRANSFER DUCT DETAIL
NOT TO SCALE

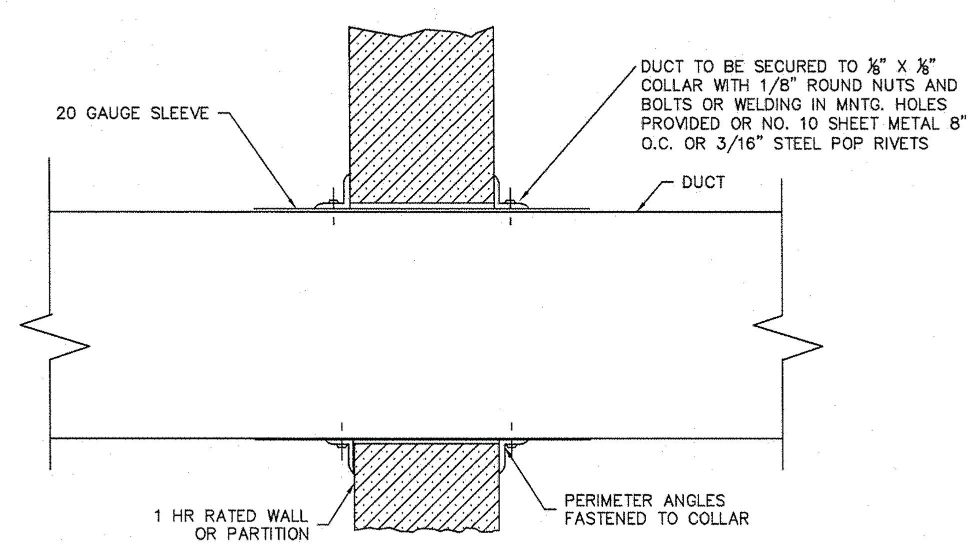

NOTES:
1. REFER TO SPECIFICATIONS FOR ALL MATERIALS
2. SEAL ANNULAR SPACE AT PENETRATION WITH FIREPROOFING MATERIAL IN ACCORDANCE WITH SECTION 712 OF NYCBC

DETAIL OF DUCT PENETRATING 1-HR FIRE RATED PARTITIONS
NOT TO SCALE

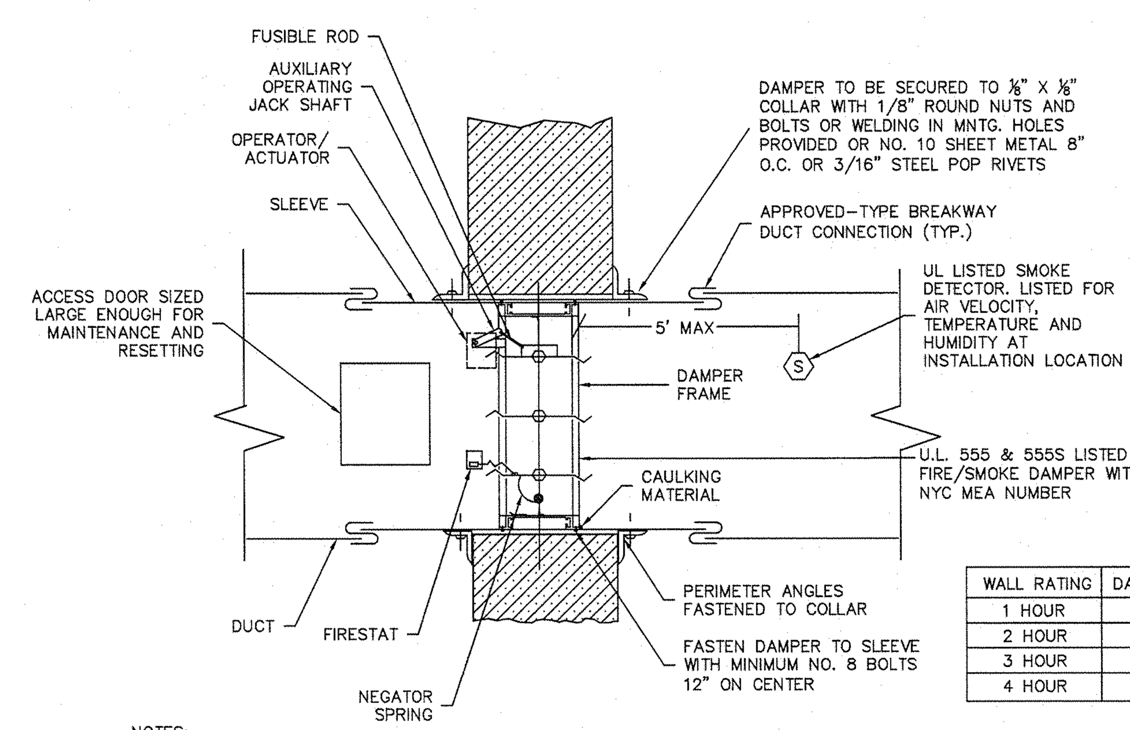

WALL RATING	DAMPER RATING
1 HOUR	1½ HOUR
2 HOUR	1½ HOUR
3 HOUR	3 HOUR
4 HOUR	3 HOUR

DUCT DIMENSION	SLEEVE GAUGE
12 SF AND SMALLER	20
ABOVE 12 SF	18

NOTES:
① REFER TO FIRE/SMOKE DAMPER MANUFACTURER'S INSTALLATION DETAILS. CONFORM TO MOST STRINGENT REQUIREMENT IF THIS DETAIL CONFLICTS WITH UL LISTING INSTALLATION INSTRUCTIONS.

COMBINATION FIRE/SMOKE DAMPER DETAIL
NOT TO SCALE

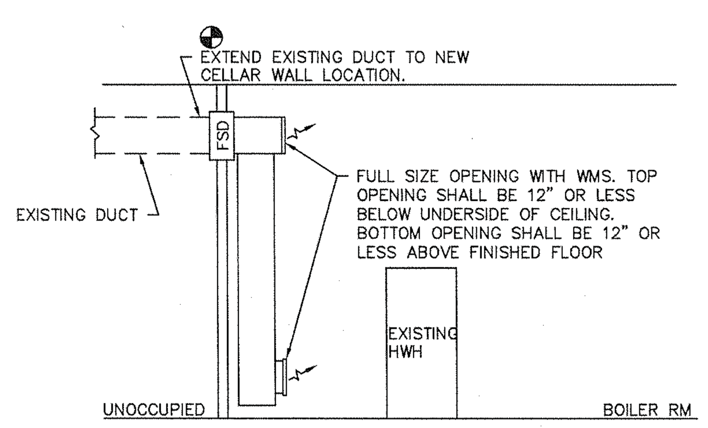

COMBUSTION AIR DUCTWORK SCHEMATIC
NOT TO SCALE

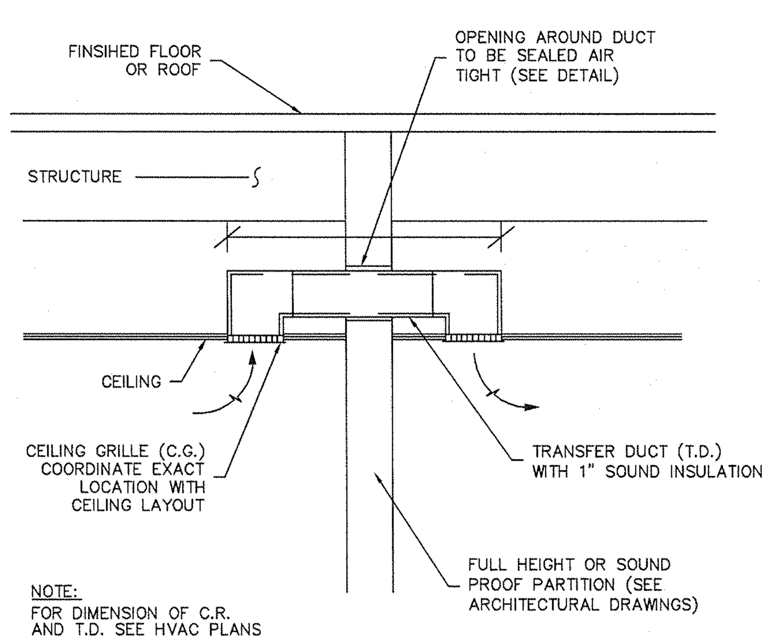

NOTE:
FOR DIMENSION OF C.R. AND T.D. SEE HVAC PLANS

CEILING GRILLE & TRANSFER DUCT DETAIL
NOT TO SCALE

GENERAL NOTES:
1. COORDINATE FLASHING REQUIREMENTS AND CURB INSTALLATION WITH ROOFING CONTRACTOR AND ARCHITECTURAL ROOF REQUIREMENTS.

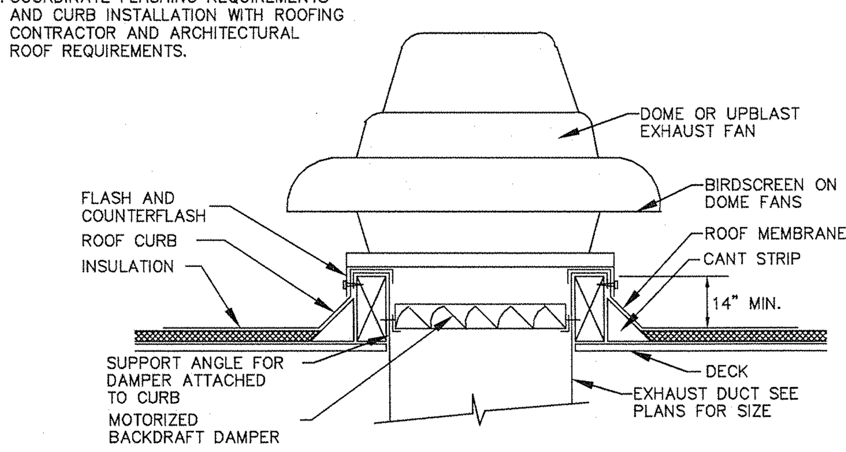

ROOF MOUNTED EXHAUST FAN DETAIL
NOT TO SCALE

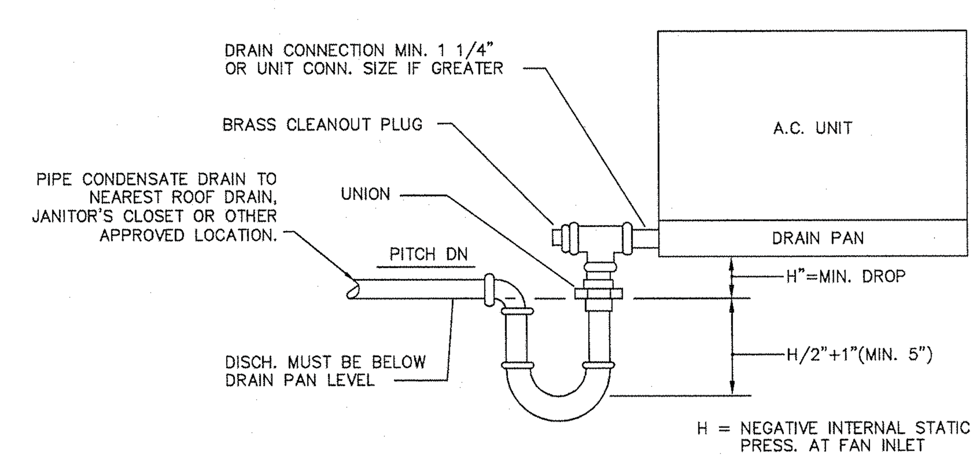

CONDENSATE DRAIN PIPING DRAW THRU UNIT DETAIL
NOT TO SCALE

NOTES:
1. LIQUID DETECTOR SHALL SHUT DOWN UNIT AND CLOSE AUTOMATIC SUPPLY & RETURN VALVES UPON SENSING LIQUID AND OSUND ALARM.
2. PROVIDE STAINLESS STEEL DRIP PAN AND LIQUID DETECTORS BENEATH ALL HYDRONIC EQUIPMENT AND PIPING.
3. PROVIDE CONDENSATE PUMP FOR EACH UNIT AND PIPE TO APPROVED LOCATION. VERIFY LOCATION WITH BUILDING. CONDENSATE PUMPS SHALL BE LITTLE GIANT VCMA-20ULS. 120V, 1PH, 60 HZ, 93W. 25 GPH @ 15' HEAD, 20' SHUTOFF HEAD. ½ GAL TANK CAPACITY.

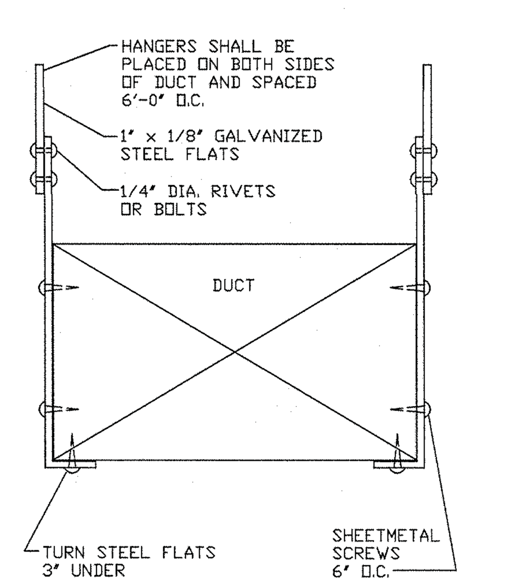

METHOD OF SUPPORTING DUCTS
NOT TO SCALE

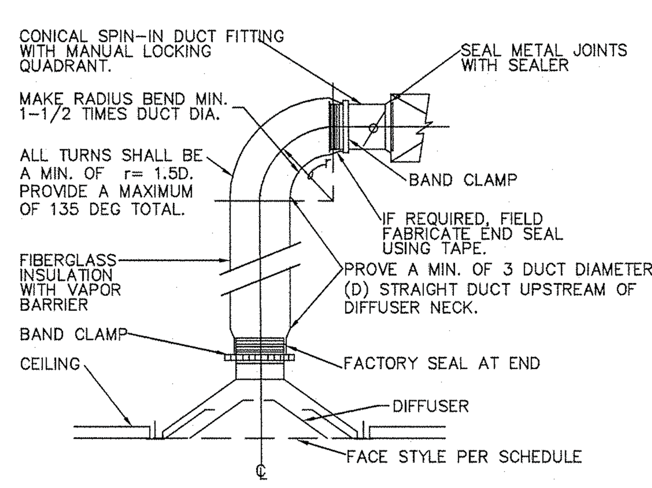

CEILING DIFFUSER DETAIL
NO SCALE

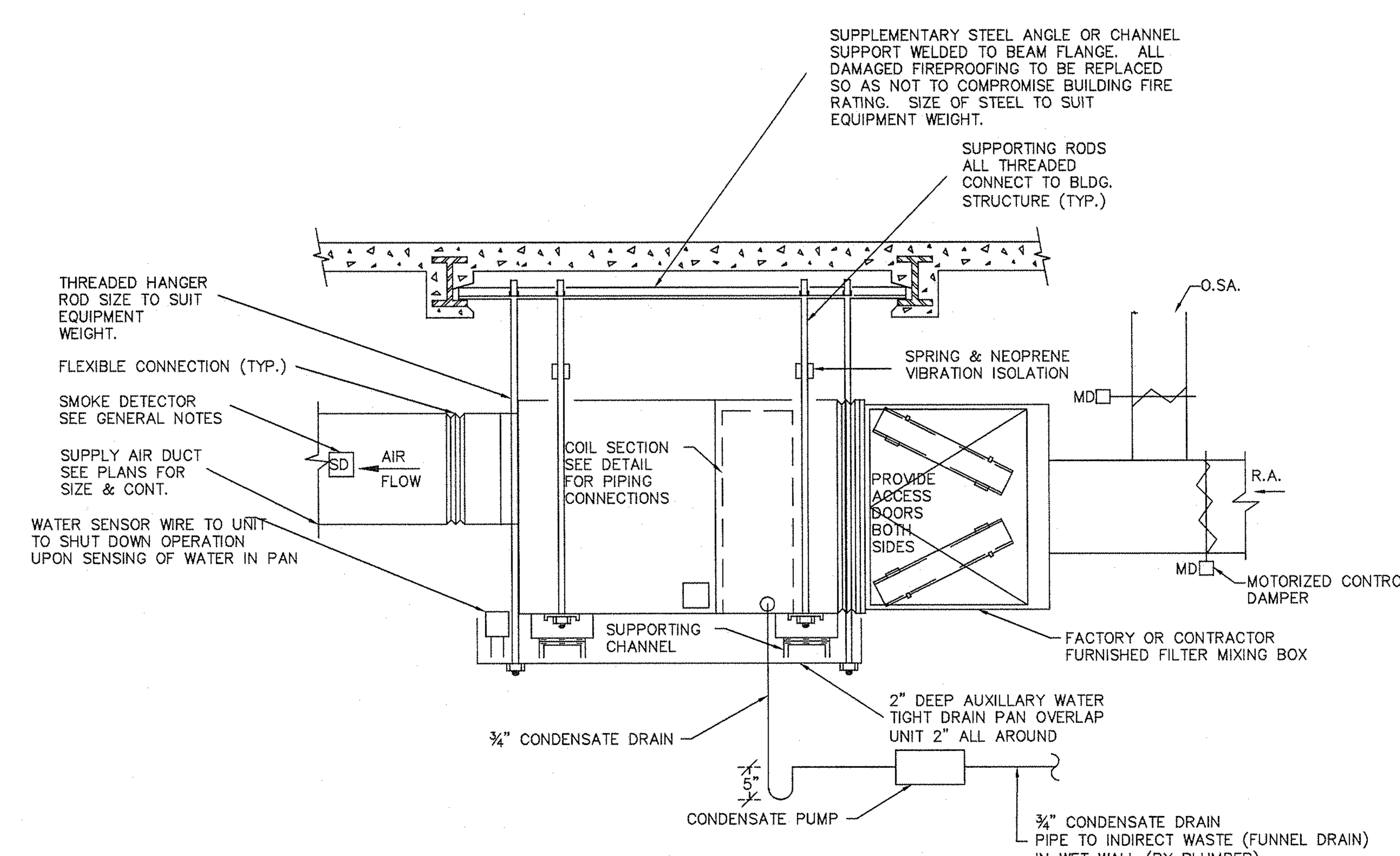

NOTES:
1. LIQUID DETECTOR SHALL SHUT DOWN UNIT AND CLOSE AUTOMATIC SUPPLY & RETURN VALVES UPON SENSING LIQUID.
2. PROVIDE STAINLESS STEEL DRIP PAN AND LIQUID DETECTORS BENEATH ALL HYDRONIC EQUIPMENT AND PIPING.
3. PROVIDE CONDENSATE PUMP FOR EACH UNIT HUNG ABOVE CEILING AND PIPE TO FUNNEL DRAIN OR APPROVED LOCATION ON THIS FLOOR. COORDINATE EXACT LOCATION. CONDENSATE PUMPS SHALL BE LITTLE GIANT VCMA-20ULS. 120V, 1PH, 60 HZ, 93W. 25 GPH @ 15' HEAD, 20' SHUTOFF HEAD, ½ GAL TANK CAPACITY
4. SPRING ISOLATORS ARE NOT REQUIRED IF FAN IS INTERNALLY ISOLATED

SUSPENDED AIR HANDLER/FAN COIL (DX OR HYDRONIC) UNIT DETAIL
NOT TO SCALE

NOTE:
DAMPERS SHOULD NOT BE INSTALLED CLOSER THAN TWO DUCT WIDTHS TO ELBOWS OR INTERSECTIONS

NOTE:
L=1/4 W (4" MIN.)

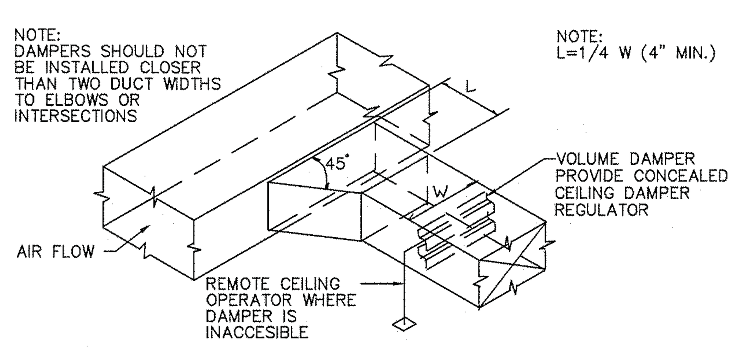

BRANCH DUCT TAKE-OFF DETAIL
NOT TO SCALE

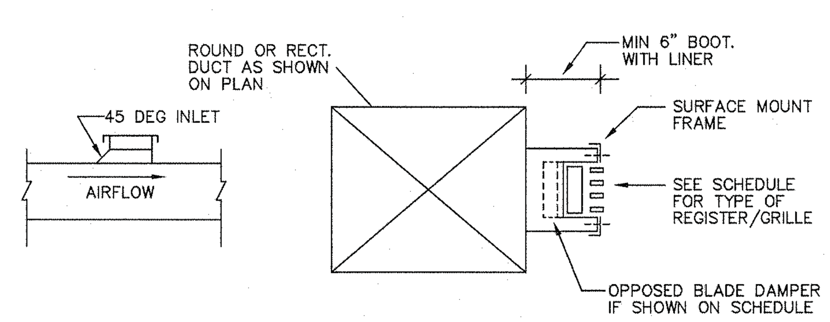

DUCT MOUNTED AIR DEVICE
NOT TO SCALE

Project
BROOKLYN PHILHARMONIC MUSIC CENTER
299 DeGraw Street, Brooklyn, NY 11231

Prepared for
Brooklyn Philharmonic
55 Washington Street, Suite 656
Brooklyn, NY 11201

Contract No: 79.07250.09

HOK
1065 Avenue of the Americas
New York, NY 10018 USA
t +1 212 741 1200 f +1 212 633 1163

All reproduction & intellectual property rights reserved © 2012
In Association with

NEW YORK CITY DEPARTMENT OF DESIGN + CONSTRUCTION

NYC Department of Design & Construction
30-30 Thompson Avenue, #5-076
Long Island City, NY 11101

Old Structures
Structural Engineers
111 Broadway, 14th Floor
New York, NY 10006

M-E Engineers
MEP Engineers
29 West 38th Street, 5th Floor
New York, NY 10018

Syska Hennessy Group
Lighting Consultant
11 West 42 Street
New York, NY 10036

Key Plan

BLOCK: 414
LOT: 61

Professional Seals

It is a violation of the law of the State of New York for any person, unless acting under the direction of a licensed architect, to alter any item on these drawings.

No.	Issue Description	MM-DD-YYYY
1	ISSUED FOR FILING	06-14-2012
2	ISSUED FOR BID	07-20-2012

No.	Revision Description	MM-DD-YYYY

B-Scan

Drawn by AW Reviewed by EP
Project No 79.07250.09
Date June 1, 2011
CAPIS ID PV467BPHL

Sheet Title
HVAC DETAILS SHEET#2

Sheet Number
M-702.00

Sheet 8 of 8
Original drawing is 42 x 30. Do not scale contents of this drawing

K:\DWG\brooklynphilharmonic_ny08037\CAD\HVAC\NY08037-M30-01.dwg Jul 19, 2012 06:29pm awilcox